LIGHT-WEIGHT SELF-PROPELLED

45 XA - 55 XA

Access like never before

- Hydraulic outriggers and automatic leveling allow operation in under 30 seconds
- High performance 4WD and light weight provide access to places larger and heavier machines cannot go
- Easily transported on a trailer with no commercial driver's license requirement
- Dual power source (DC / Gas) allows for indoor/outdoor use

Optimum performance

- 4,000 Watt generator
- Air / water lines to platform
- 110V GFI protected power to the platform

Haulotte GROUP

More than lifting

www.haulotte-usa.com

45 XA - 55 XA

LIGHT-WEIGHT SELF-PROPELLED

Haulotte GROUP

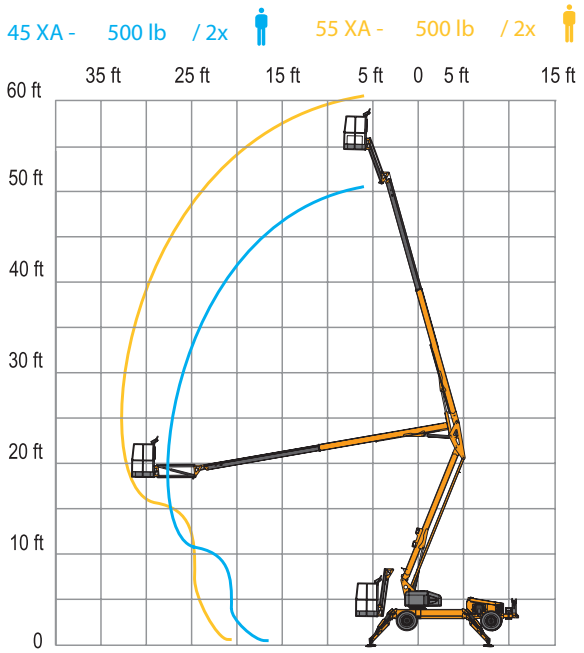

TECHNICAL DATA

	45 XA	55 XA
Working height	51 ft	61 ft 3 in
Platform height	45 ft	55 ft 3 in
Horizontal outreach (from centerline)	27 ft	33 ft 5 in
Horizontal outreach (from edge of footpad)	21 ft	27 ft 4 in
Up and over height	20 ft 9 in	23 ft 1 in
Lift capacity	500 lbs	
A - Length - stowed	18 ft 2 in	21 ft 2 in
B - Width stowed	5 ft 6 in	5 ft 8 in
C - Height stowed	6 ft 7 in	6′ 9″
D - Wheelbase	8 ft 9 in	10 ft 1 in
E - Ground clearance	6 in	10 in
F x G - Platform size	5 ft x 2 ft 6 in	
H x I - Outrigger footprint	12 ft 4 in x 11 ft 4 in	13 ft 11 in x 12 ft 9 in
Turntable rotation	350° non-continuous	
Jib - length	4 ft 3 in	
Jib - Vertical Motion	150° (+70 / -80)	
Drive speed	4.75 mph (max)	4.75 mph (max)
Gradeability	45%	
Leveling capability	12.5°	
Turning radius - inside (2WS)	5 ft 4 in	11 ft 4 in
Turning radius - inside (4WS)	10 ft	6 ft 8 in
Tire size	26 x 12 Bar lug	
Batteries	4 x 6V 245 Amp-hr	
Engine	31 hp gas Kubota	31 hp gas Kubota
Weight	5200 lbs	6,000 lbs

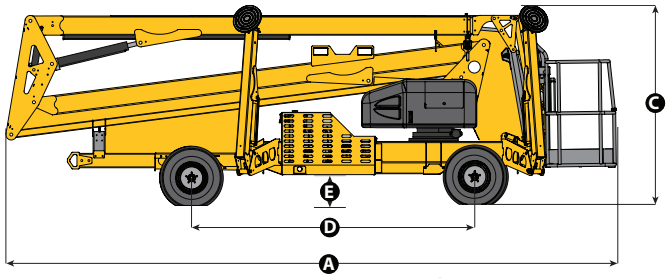

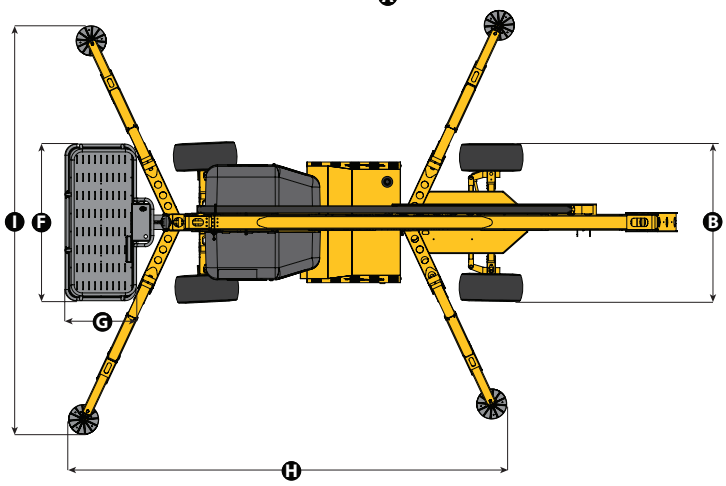

STANDARD EQUIPMENT

- Hydraulic outriggers
- Automatic leveling system (leveling capability 12.5°)
- Self-leveling platform
- Air and water lines to platform
- 110V GFI protected outlet to platform and base
- 4,000 W generator
- Hour meter
- Battery condition indicator
- Dual power system
- Easy to use controls with logically positioned buttons
- Tilt alarm / sensor
- Spring applied hydraulic released brakes
- Inboard 25 amp charger
- Bar lug tires
- 4 wheel steering (standard on 55XA)

OPTIONS AND ACCESSORIES

- Material lifting hook
- Platform rotator (manual)
- Flashing beacon
- Flourescent tube caddy
- Tool tray
- Turf tires
- Dual fuel - 32.5 Hp gas / liquid propane Kubota
- Diesel 21.6 Hp
- Non-marking bar lug tires
- 4 wheel steering - 45XA

Non contractual document - We reserve the right to modify the technical characteristics of this document without notice - 05/2016